Video CV-SV 4x1 Switch
15334

Operation Manual

CONVERTERS.TV

Introduction

Video CV-SV 4x1 Switch is designed to switch between Standard Definition (SD) Composite and Super video sources such as VCR's, DVD players and Gaming Consoles like XBox and PS3, all to share onto one Composite or S-video enabled display. Supports standard Interlaced video and analog L/R audio sources of 480i and 576i resolution (NTSC and PAL). Control four SD video sources to display as required to the one screen, plus their associated analog L/R audio can be run to the TV speakers, or to an external Amplifier. Ideal for multi-input addition to single input TV's.

Applications

4x1 CV/SV switcher is designed for switching between video & S-video sources. Such as VCR,DVD player... to share one TV display.

Features

- LED indicators.
- IR remote control
- Supports Standard Def (SD) video sources: 480i (NTSC) and 576i (PAL)
- Supports L/R audio input / output
- Plug and play, easy to install and operate
- Supports control either through input selection buttons on the front panel, or by using the included infrared remote control
- RS-232 interface allows control from a PC device
- Ideal for presentation and large shop integration.
- Support audio format: L/R (analog) or PC AMP speaker system (option)

Operation Controls and Functions

Front Panel

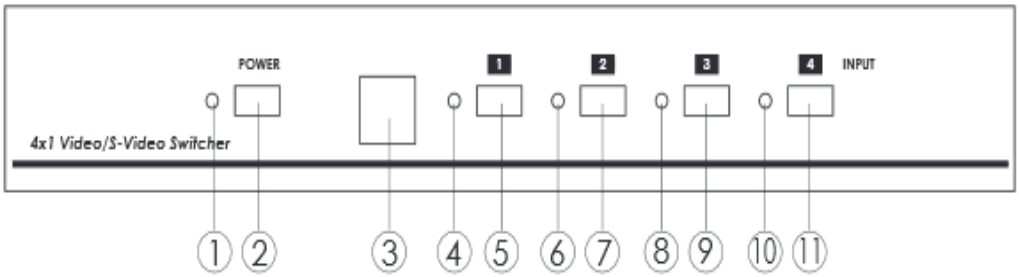

1. **Power indicator LED.**
2. **Power ON/OFF switch:** Push the button to turn ON/OFF the power.
3. **IR sensor:** Infrared remote control sensor.
4. **Input 1 indicator LED .**
5. **Input 1 switch:** Push the button, LED lights up, source 1 is selected.
6. **Input 2 indicator LED.**
7. **Input 2 switch:** Push the button, LED lights up, source 2 is selected.
8. **Input 3 indicator LED .**
9. **Input 3 switch:** Push the button, LED lights up, source 3 is selected.
10. **Input 4 indicator LED.**
11. **Input 4 switch:** Push the button, LED lights up, source 4 is selected.

Rear Panel

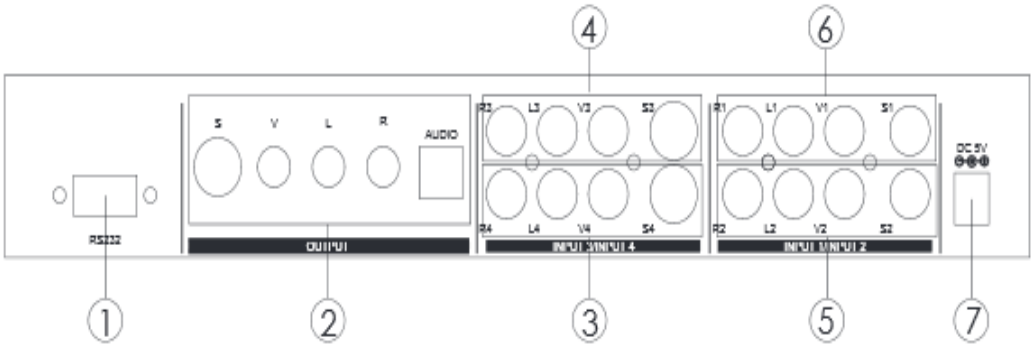

1. RS-232: 9-pin D-sub female connector for connecting to your other control console for remote control.
2. CV/SV+Audio output: Use a CV/SV cable to connect to your display.
Use a 1 RCA to 1 RCA video cable to your display.
Use a 2 RCA to 2 RCA audio cable to your display.
(Option) connects to your PC AMP speaker system.
3. CV/SV + Audio input 4: Use a CV/SV cable to connect to your source 4.
4. CV/SV + Audio input 3: Use a CV/SV cable to connect to your source 3.
5. CV/SV + Audio input 2: Use a CV/SV cable to connect to your source 2.
6. CV/SV + Audio input 1: Use a CV/SV cable to connect to your source 1.
7. DC power jack : 5V1A power input ,center +.

Remote Control

1. Power: Switch between power ON and Standby.
2. Press button 1 to select source 1.
3. Press button 2 to select source 2.
4. Press button 3 to select source 3.
5. Press button 4 to select source 4.
Note: Replacement battery can be found at a local electronic retail store.

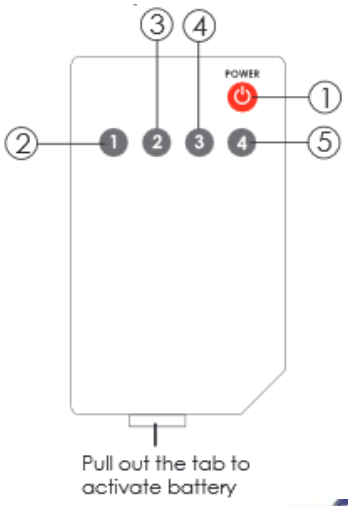

RS232 Remote Control Protocol

The connection between Video CV-SV 4x1 Switch and remote controller with RS-232 modem cable.

Pins definition of modem cable

Video CV-SV 4x1 Switch			Remote Controller	
PIN	**DEFINITION**		**PIN**	**DEFINITION**
1	NC		1	NC
2	TxD		2	RxD
3	RxD	→	3	TxD
4	NC		4	NC
5	GND		5	GND
6	NC	←	6	NC
7	NC		7	NC
8	NC		8	NC
9	NC		9	NC

* RS-232 transmission format:
Baud Rate : 9600 bps
Data Bit : 8 Bits
Parity: None
Stop Bit: 1 bit
* Command :

Specifications

Input	Video: S-Video: Analog Audio: (L/R)	1 Vp-p @75 ohm Y: 1 Vp-p @ 75 ohm C: 0.286 Vp-p @75 ohm 2Vrms max 47 k ohm
Output	Video: S-Video: Analog Audio: (L/R)	1 Vp-p @75 ohm Y: 1 Vp-p @ 75 ohm C: 0.286 Vp-p @75 ohm 2Vrms max 47 k ohm
PC / YpbPr Bandwidth	650 MHz (-3db)	
Differential Gain	0.05%	
Differential Phase	0.05 degree	
Power Consumption	1 Watts (max.)	
Power	5V 1A AC adaptor	
Dimensions	175(W)x 292(D) x 45(H)mm	
Unit Weight	1.5Kgs	

Connections

COMMENT
PORT 1 ON
PORT 2 ON
PORT 3 ON
PORT 4 ON
POWER ON
POWER OFF

Connection Diagram